INTERFACE

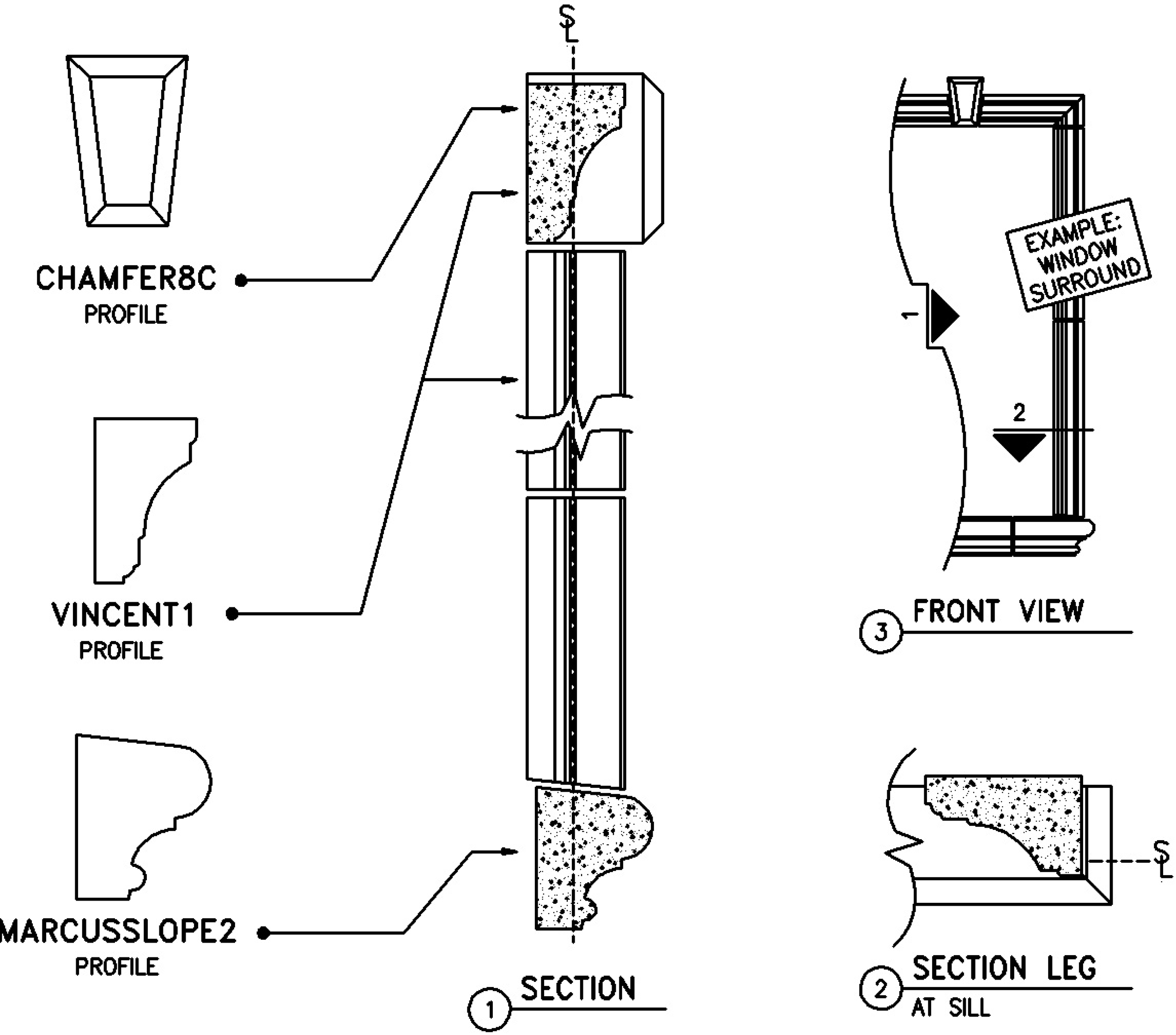

℄ = RECOMMENDED SETTING LINE

SCALE: NTS

Unit ID: **17572**