INTERFACE

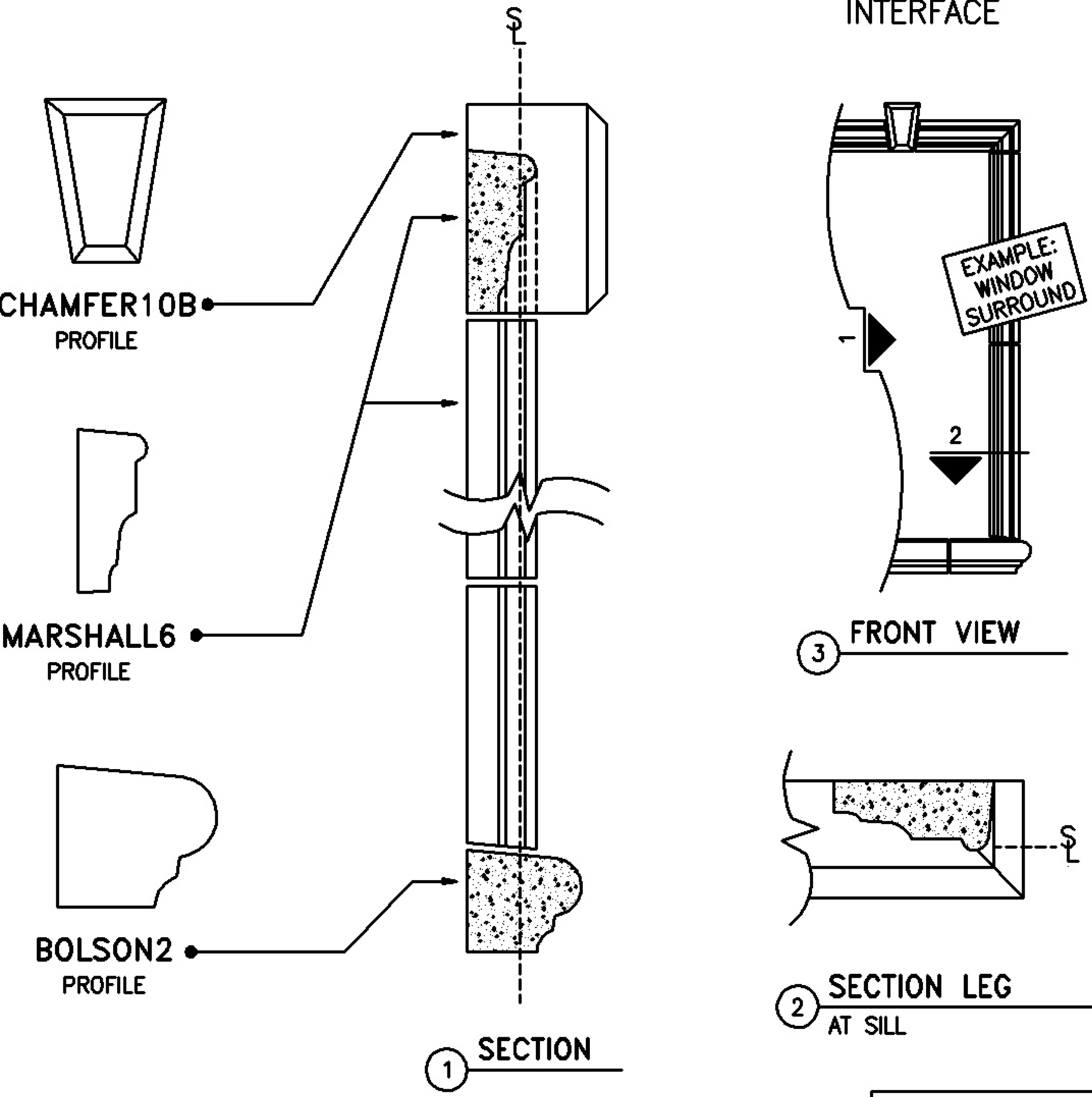

S/L = RECOMMENDED SETTING LINE

SCALE: NTS

Unit ID: **17567**