℄ = RECOMMENDED SETTING LINE

INTERFACE FAMILY

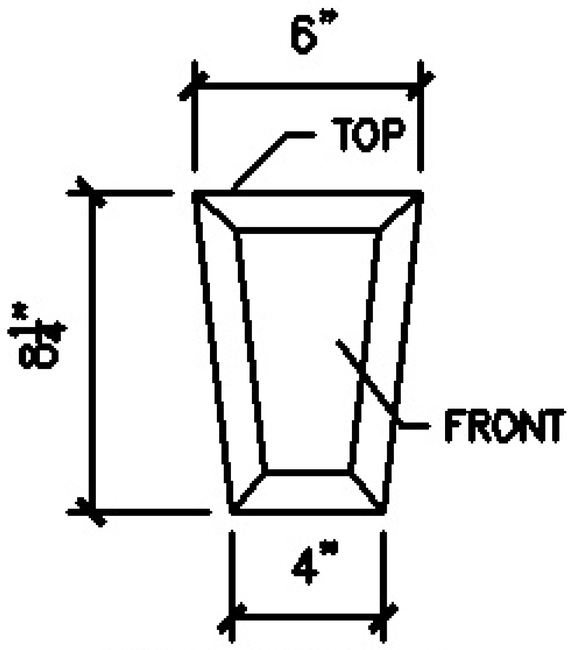

CHAMFER8C
PROFILE

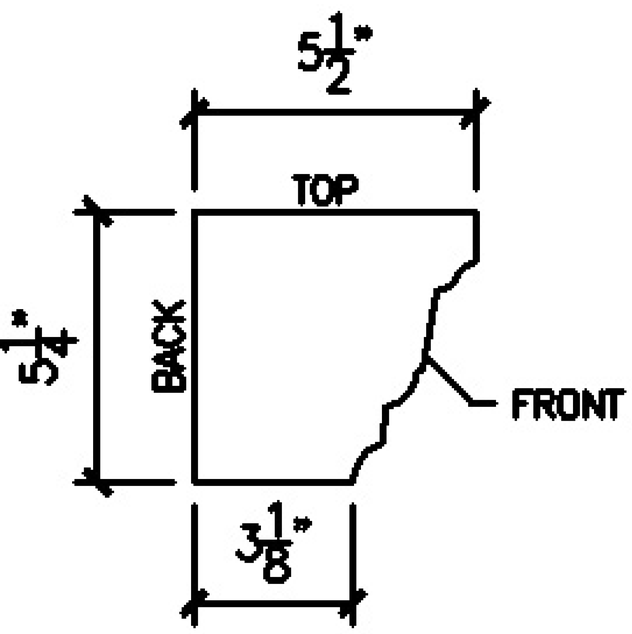

JAMISON2
PROFILE

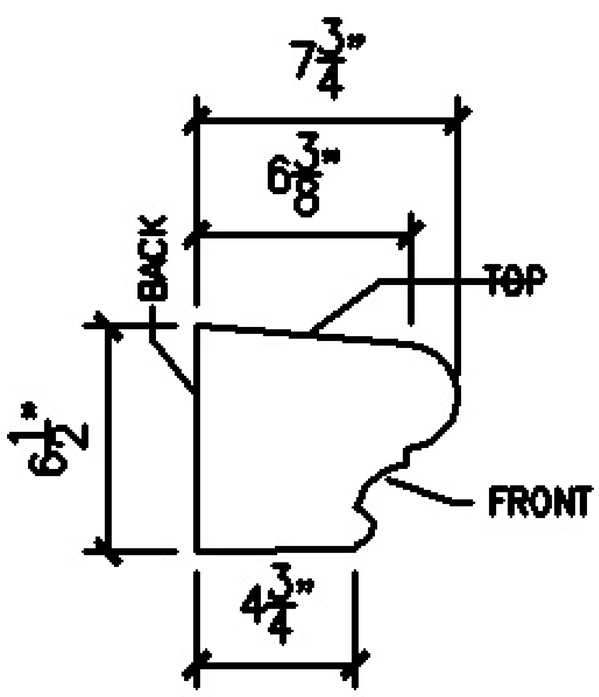

MARCUSSLOPE1
PROFILE

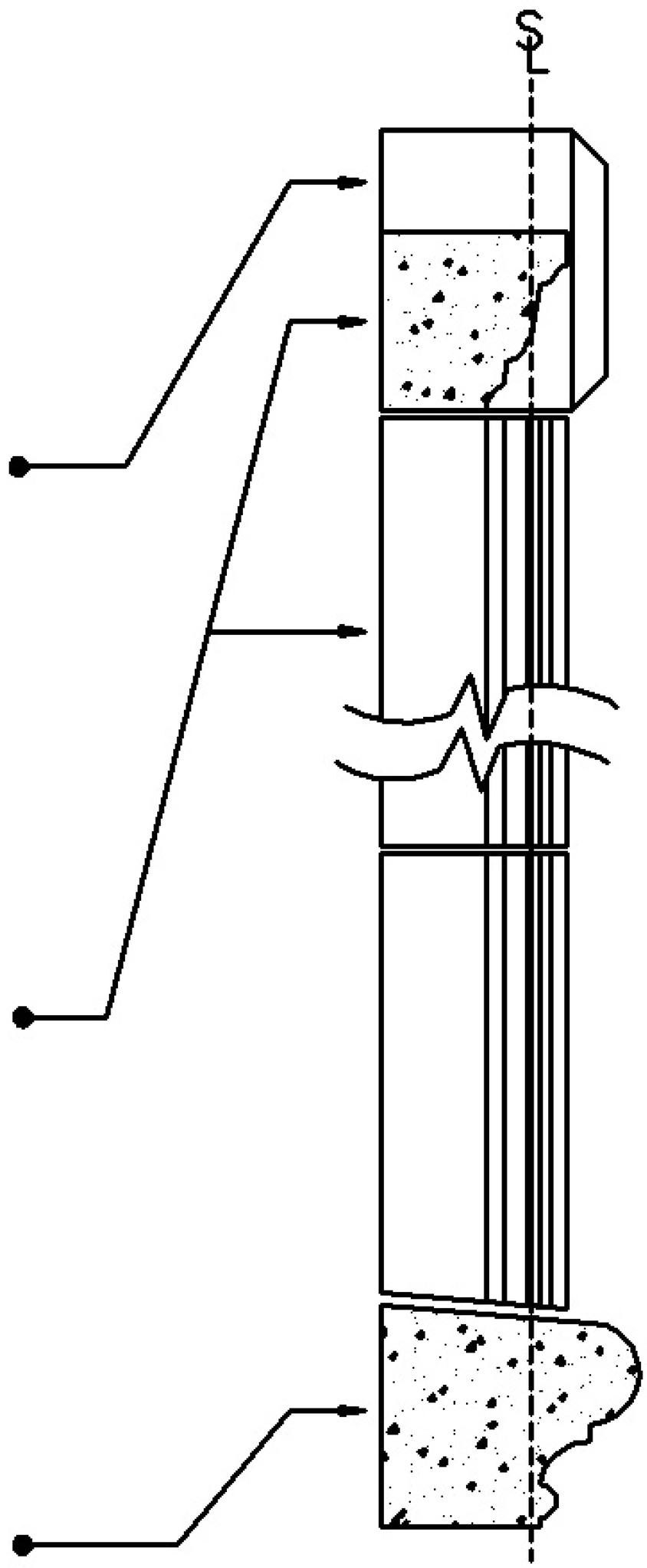

1 SECTION

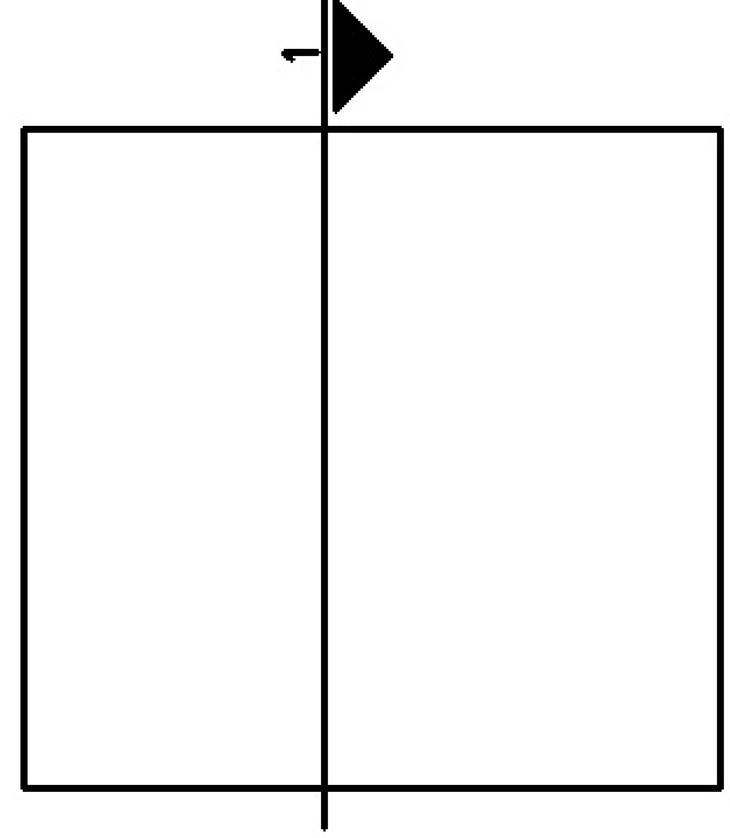

EXAMPLE PHOTO
OF SURROUND

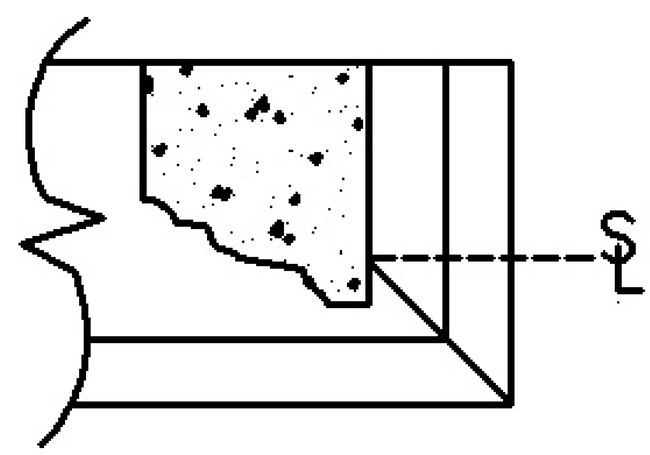

2 SECTION LEG
AT SILL

Unit ID: 17553