℄ = RECOMMENDED SETTING LINE

INTERFACE FAMILY

BALLW/PEDESTAL2
PROFILE

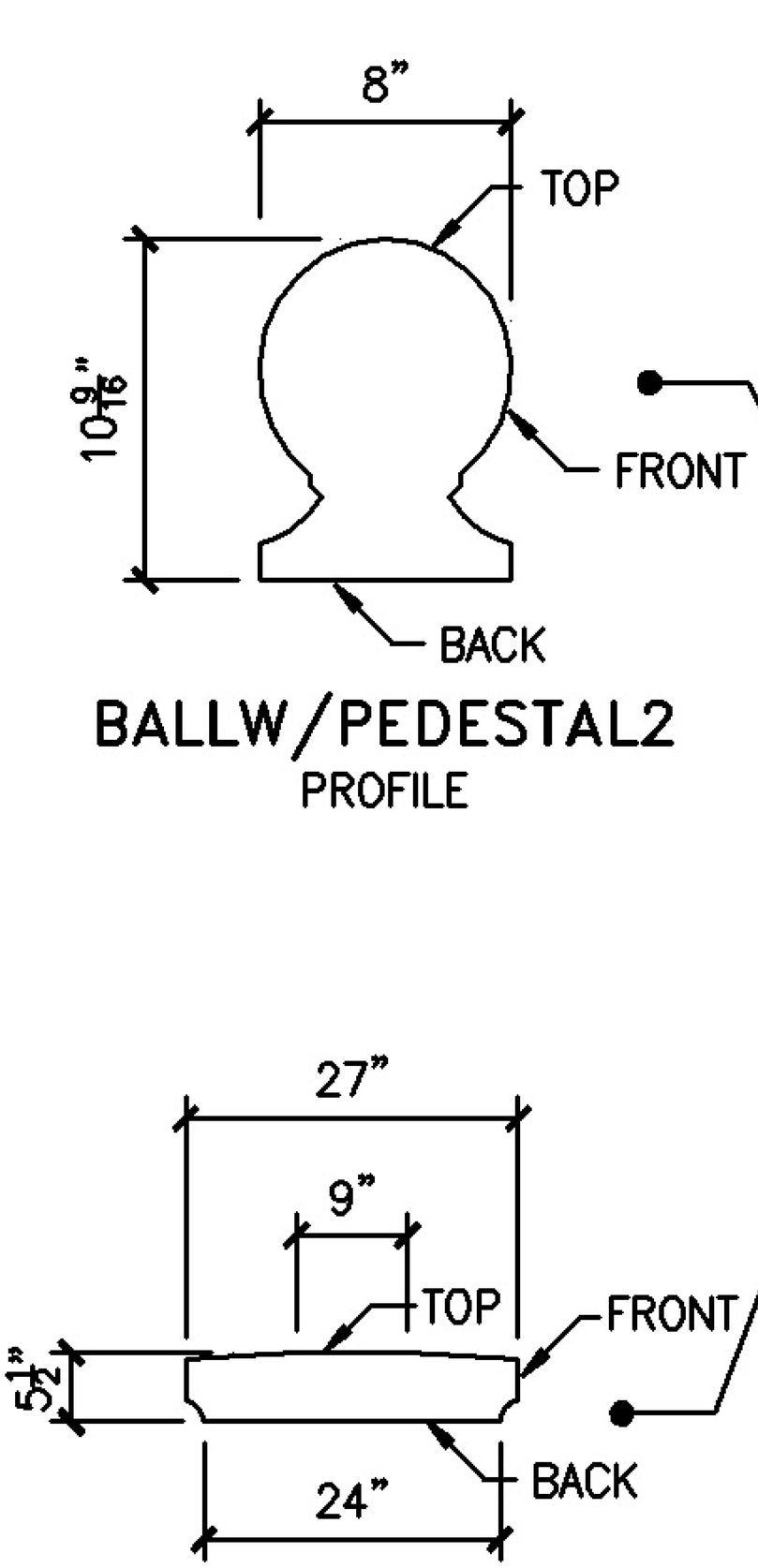

CONNELLYFLAT2
PROFILE

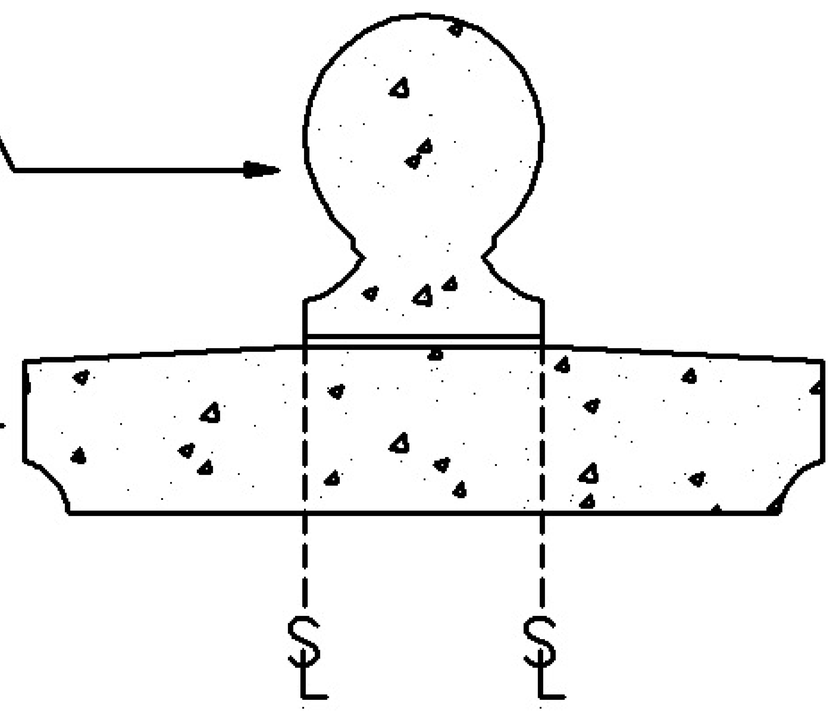

1 SECTION

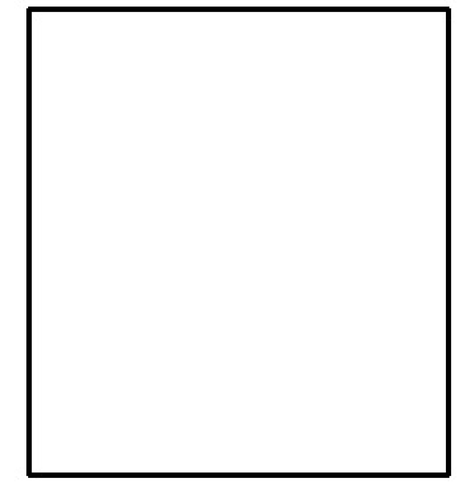

EXAMPLE PHOTO OF FINIAL

EXAMPLE PHOTO OF CAP

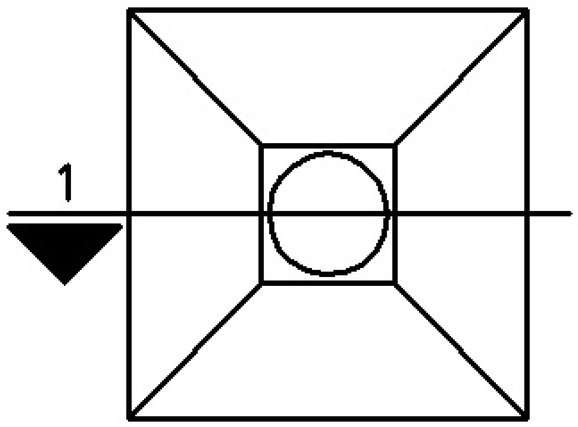

2 TOP VIEW
EXAMPLE