℄ = RECOMMENDED SETTING LINE

INTERFACE FAMILY

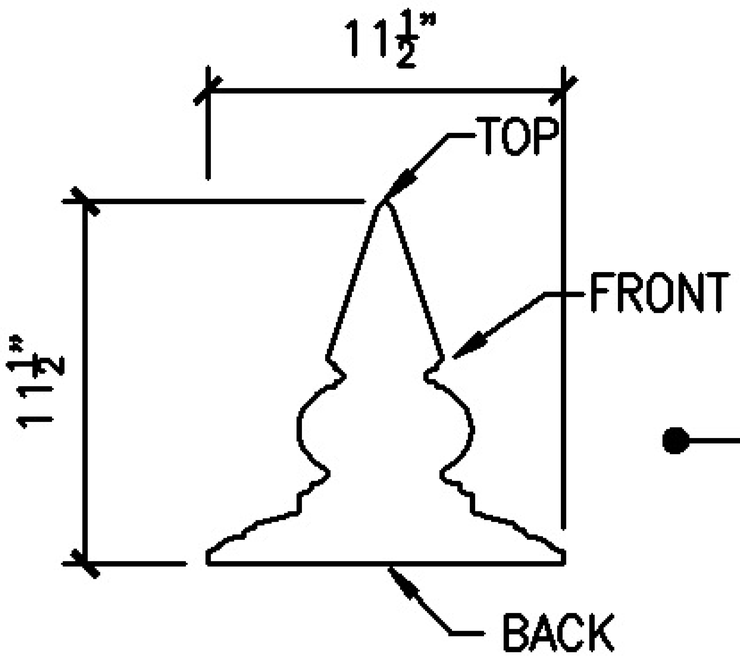


STEEPLE2
PROFILE

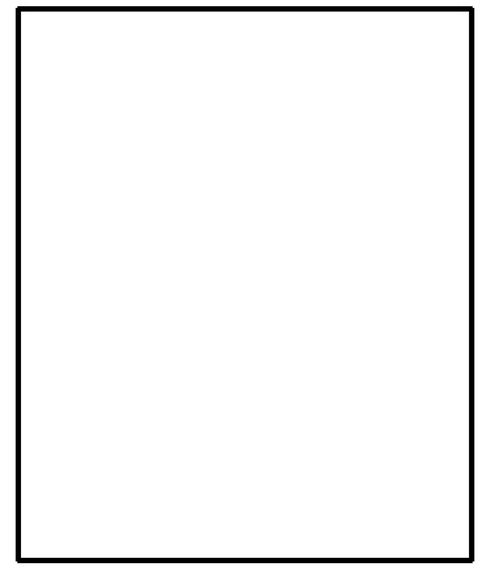

EXAMPLE PHOTO
OF FINIAL

EXAMPLE PHOTO
OF CAP

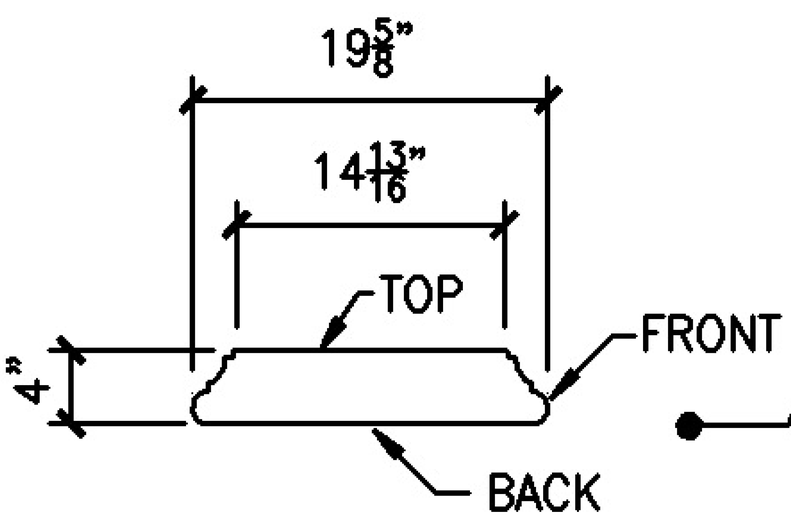


BROOKSIDE1
PROFILE

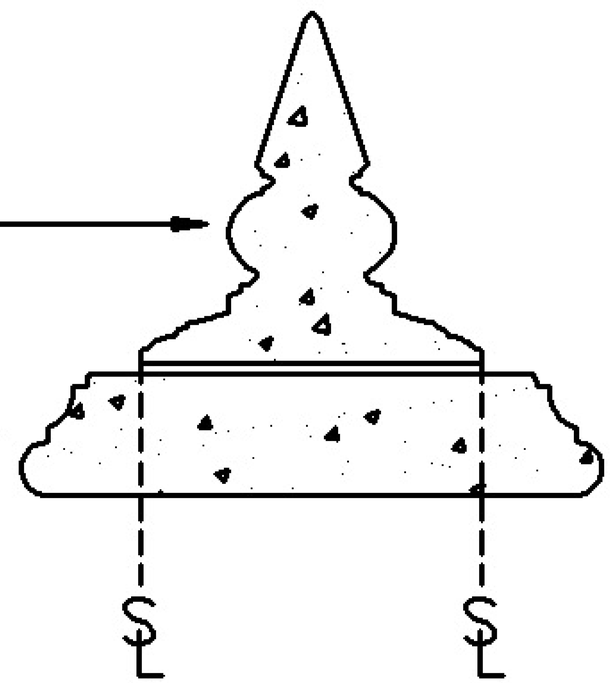


1 SECTION

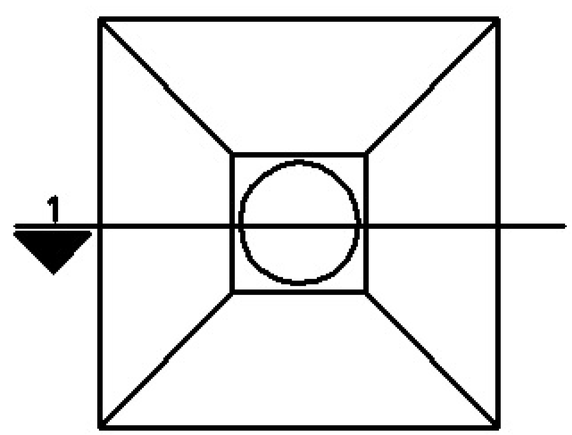


2 TOP VIEW
EXAMPLE