℄ = RECOMMENDED SETTING LINE

INTERFACE FAMILY

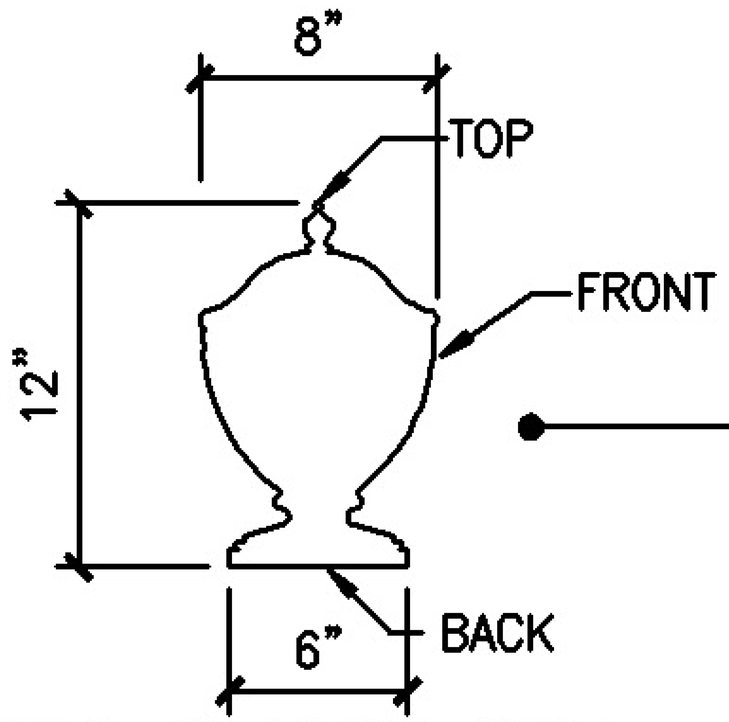

NEO-CLASSIC URN
PROFILE

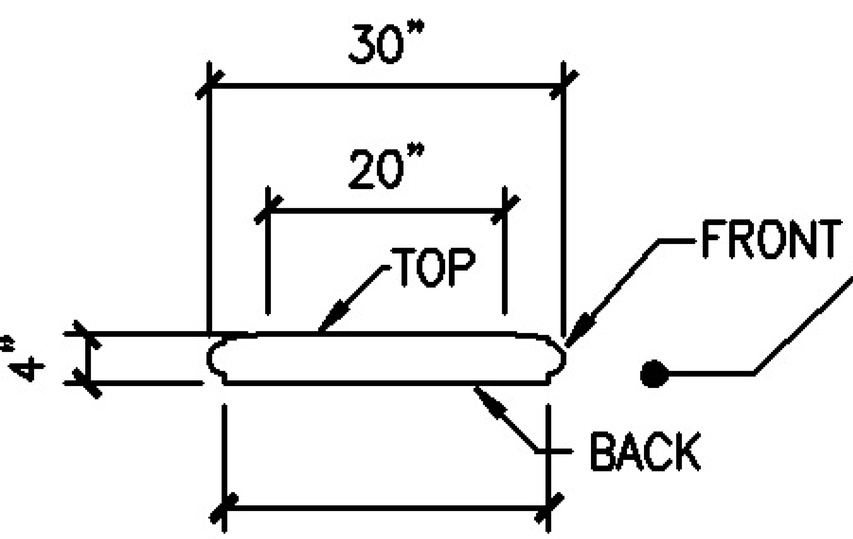

EXTRADOSFLAT7
PROFILE

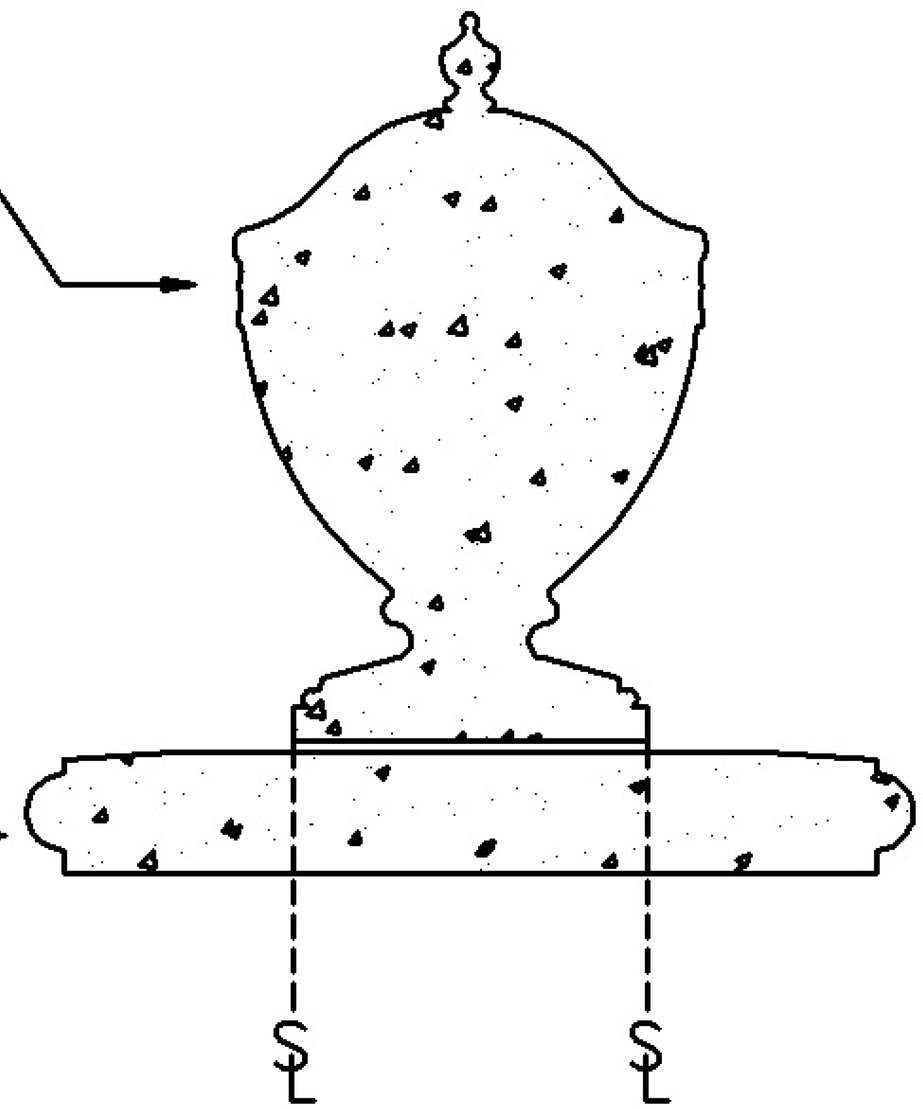

1 SECTION

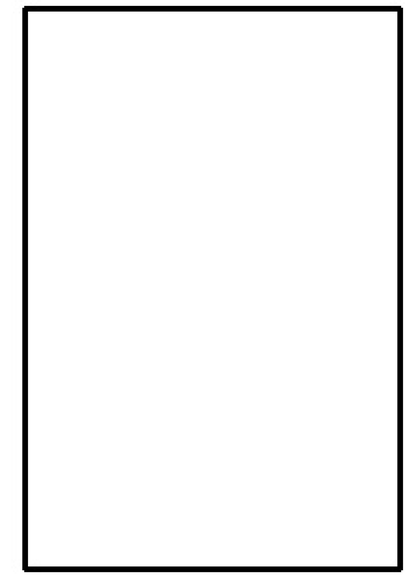

EXAMPLE PHOTO OF FINIAL

EXAMPLE PHOTO OF CAP

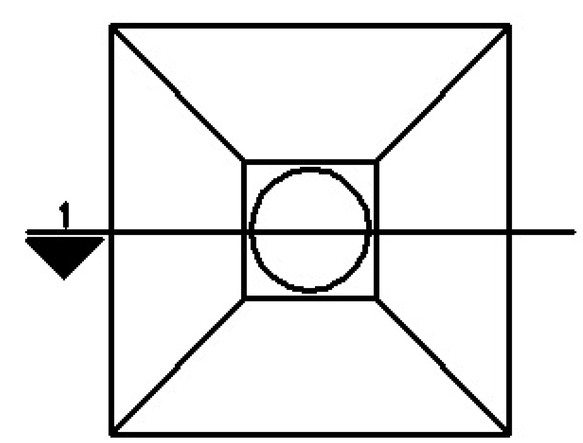

2 TOP VIEW
EXAMPLE