℄ = RECOMMENDED SETTING LINE

INTERFACE FAMILY

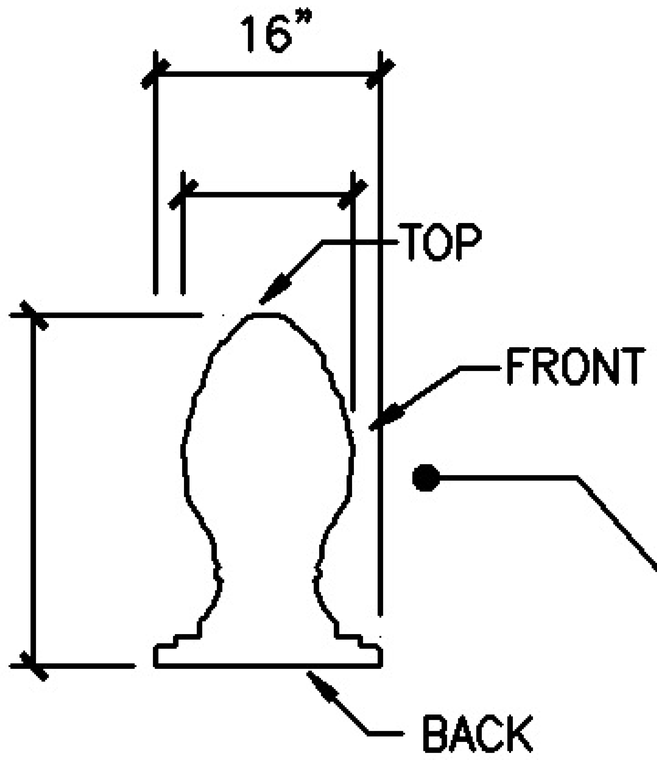

DIAMOND PINECONE1
PROFILE

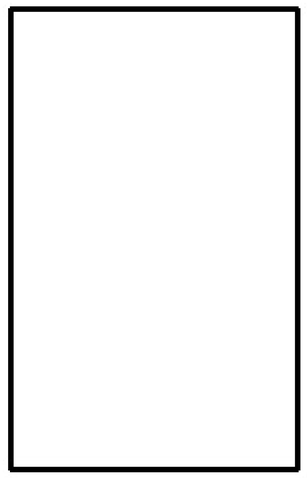

EXAMPLE PHOTO OF FINIAL

EXAMPLE PHOTO OF CAP

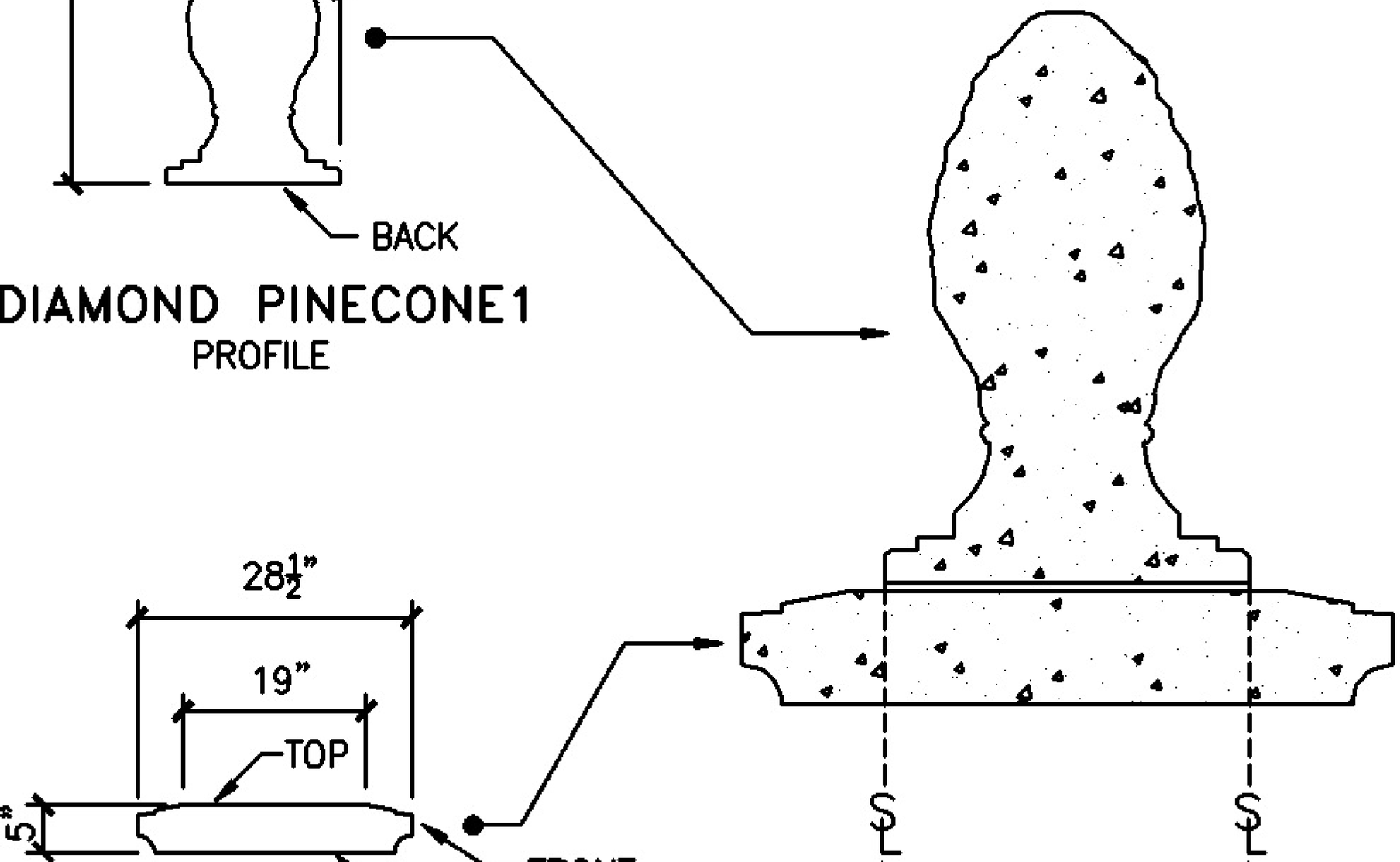

CORNEL2
PROFILE

1 SECTION

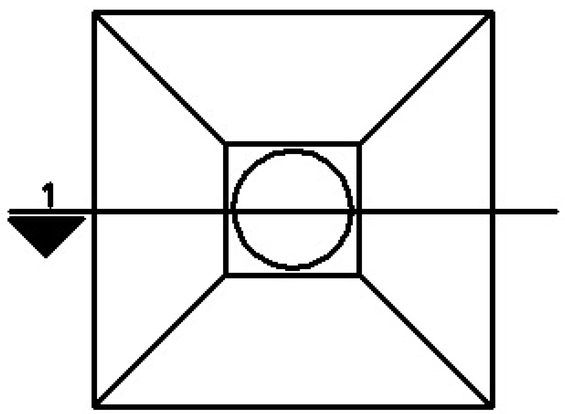

2 TOP VIEW
EXAMPLE