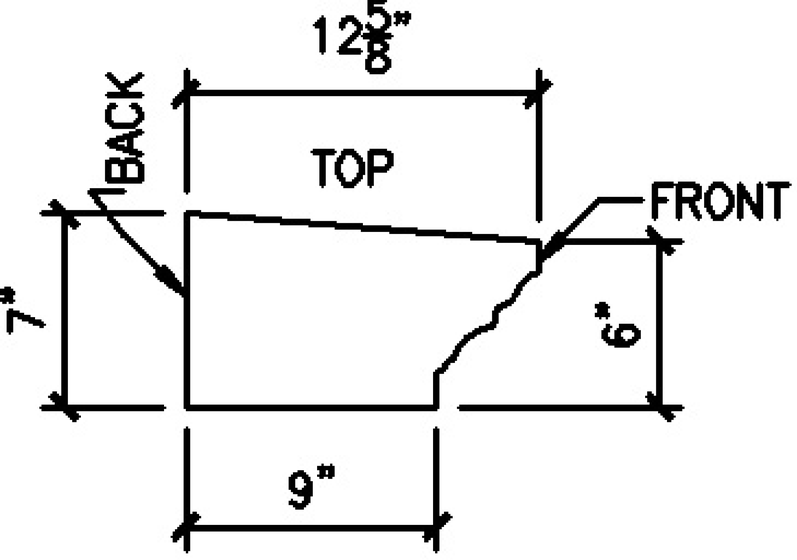

MENDE1
PROFILE

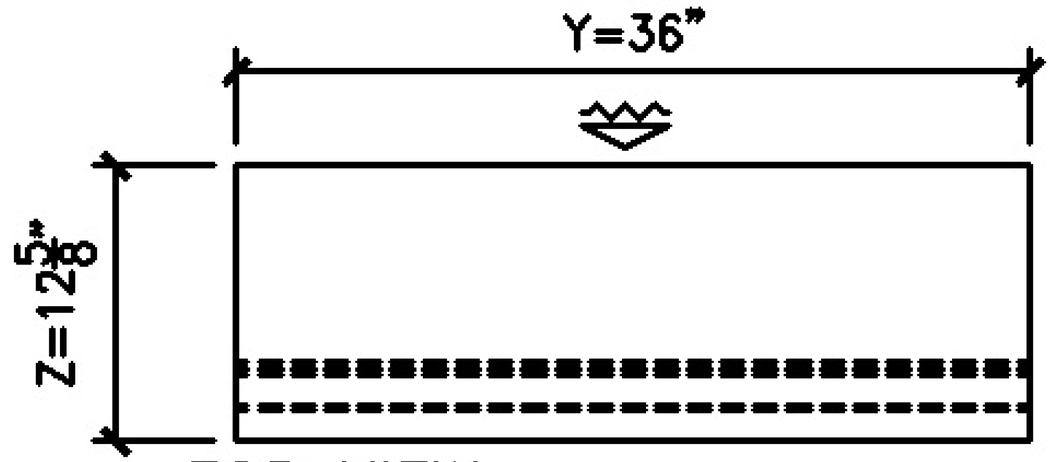

1 TOP VIEW QTY:
STRAIGHT

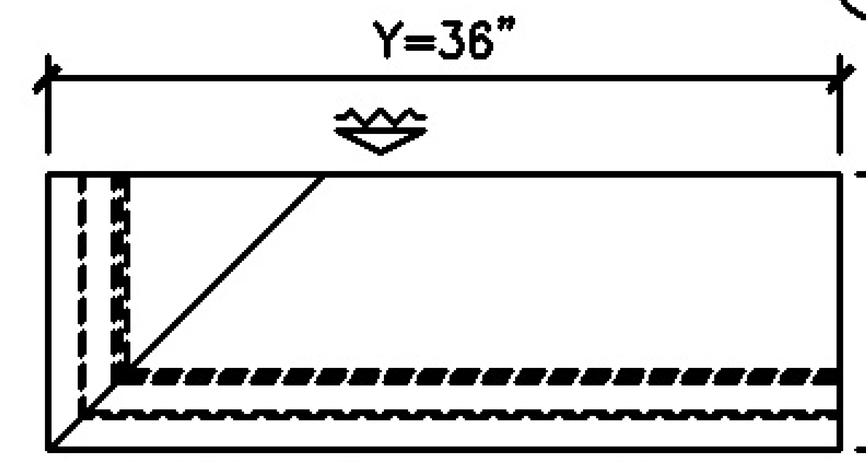

2 TOP VIEW QTY:
COPE OUTSIDE LEFT

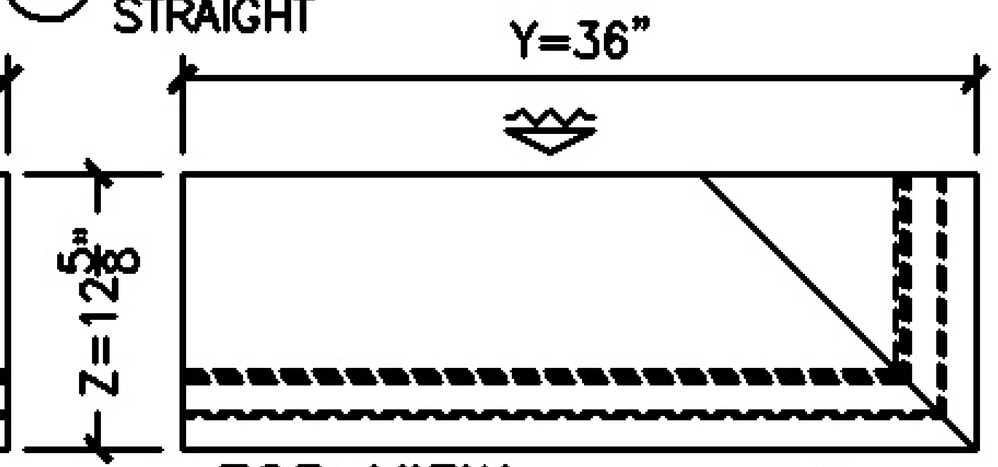

3 TOP VIEW QTY:
COPE OUTSIDE RIGHT

PIECES SUPPLIED IN
36" LENGTHS FOR
CUT TO FIT IN FIELD

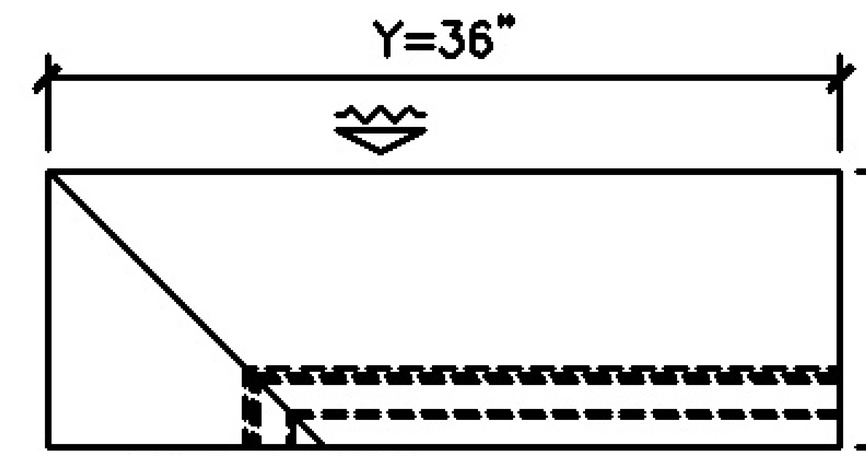

4 TOP VIEW QTY:
COPE INSIDE LEFT

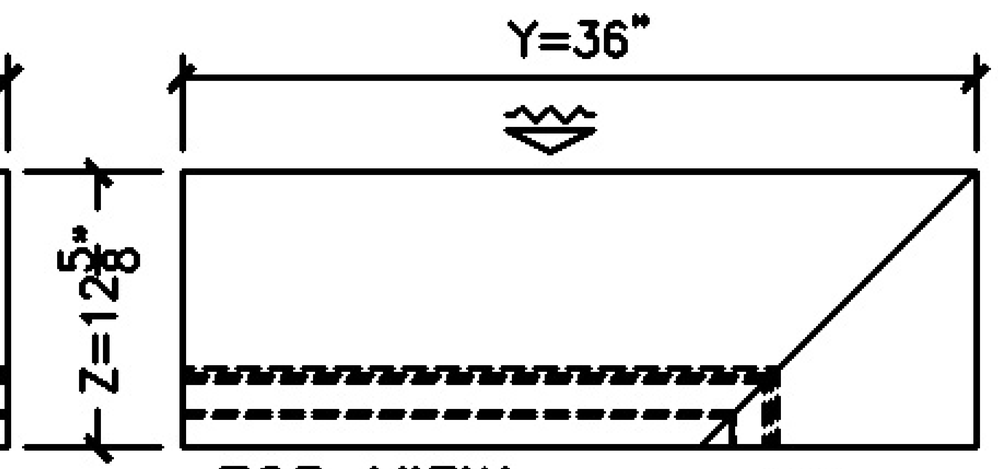

5 TOP VIEW QTY:
COPE INSIDE RIGHT

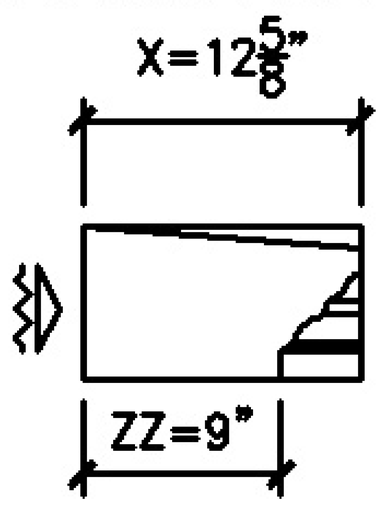

7 SIDE VIEW
COPE INSIDE RIGHT

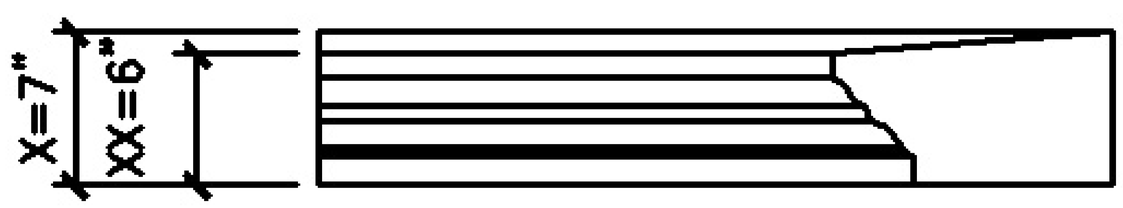

6 FRONT VIEW
COPE INSIDE RIGHT

Unit ID: **9044**